FH MÜNSTER
University of Applied Sciences

MSA FB Architektur
Münster School of Architecture

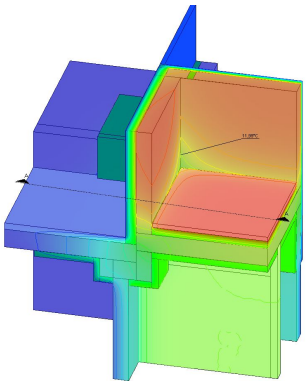

p.r.n. photo credits

bachelor

winter 21/22

ba.m4.2 building physics

course

M.Sc. Bauphysik B.A. Architektur Nadine Kretzschmar

lecturer

building physics I

title

The teaching content covers the subject areas of thermal and acoustic building physics for residential and non-residential buildings.

topic

a. Bauphysikalische Formeln und Tabellen, Wärmeschutz-Feuchteschutz-Schallschutz, 4. Auflage Wernerverlag; 2004, Hohmann, Selzer Wehling
b. Lehrbuch der Bauphysik, Fischer/Jenisch/Stohrer/Homann/Freymuth/Richter/Häupel, 6.Auflage; Vieweg +Teubner

recommended reading